Regression vs Classification

data features

data points

```
[[5.1 3.5 1.4 0.2]
 [4.9 3.  1.4 0.2]
 [4.7 3.2 1.3 0.2]
 [4.6 3.1 1.5 0.2]
 [5.  3.6 1.4 0.2]
 [5.4 3.9 1.7 0.4]
 [4.6 3.4 1.4 0.3]
 [5.  3.4 1.5 0.2]
```

input

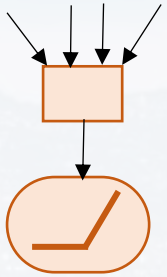

neuron `net = np.dot(Input, W)`

$$net = \sum_i I_i \cdot w_i + b$$

activation function

for example: ReLU `np.maximum(0, net)`

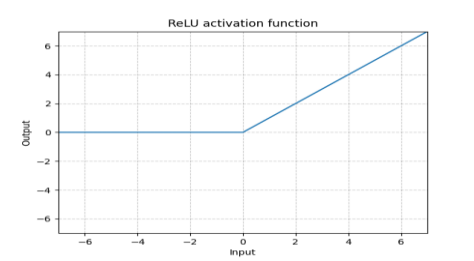

for example: sigmoid `1/(1 + np.exp(-net))`

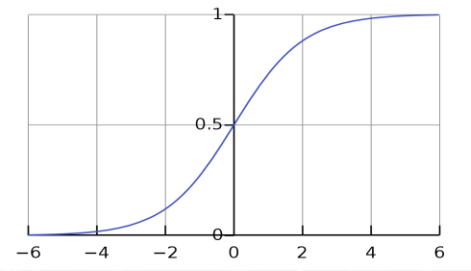

output

Regression vs Classification

data features

data points

```
[[5.1 3.5 1.4 0.2]
 [4.9 3.  1.4 0.2]
 [4.7 3.2 1.3 0.2]
 [4.6 3.1 1.5 0.2]
 [5.  3.6 1.4 0.2]
 [5.4 3.9 1.7 0.4]
 [4.6 3.4 1.4 0.3]
 [5.  3.4 1.5 0.2]
```

$$net = \sum_i I_i \cdot w_i + b$$

dot product

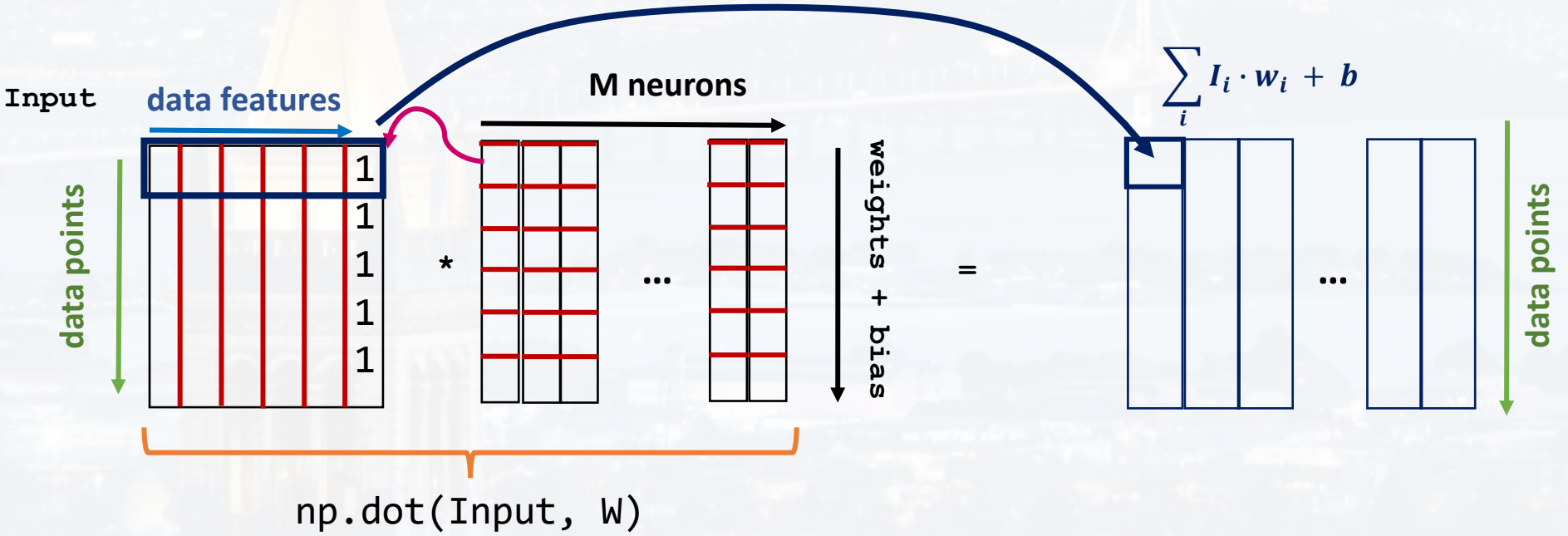

Regression vs Classification

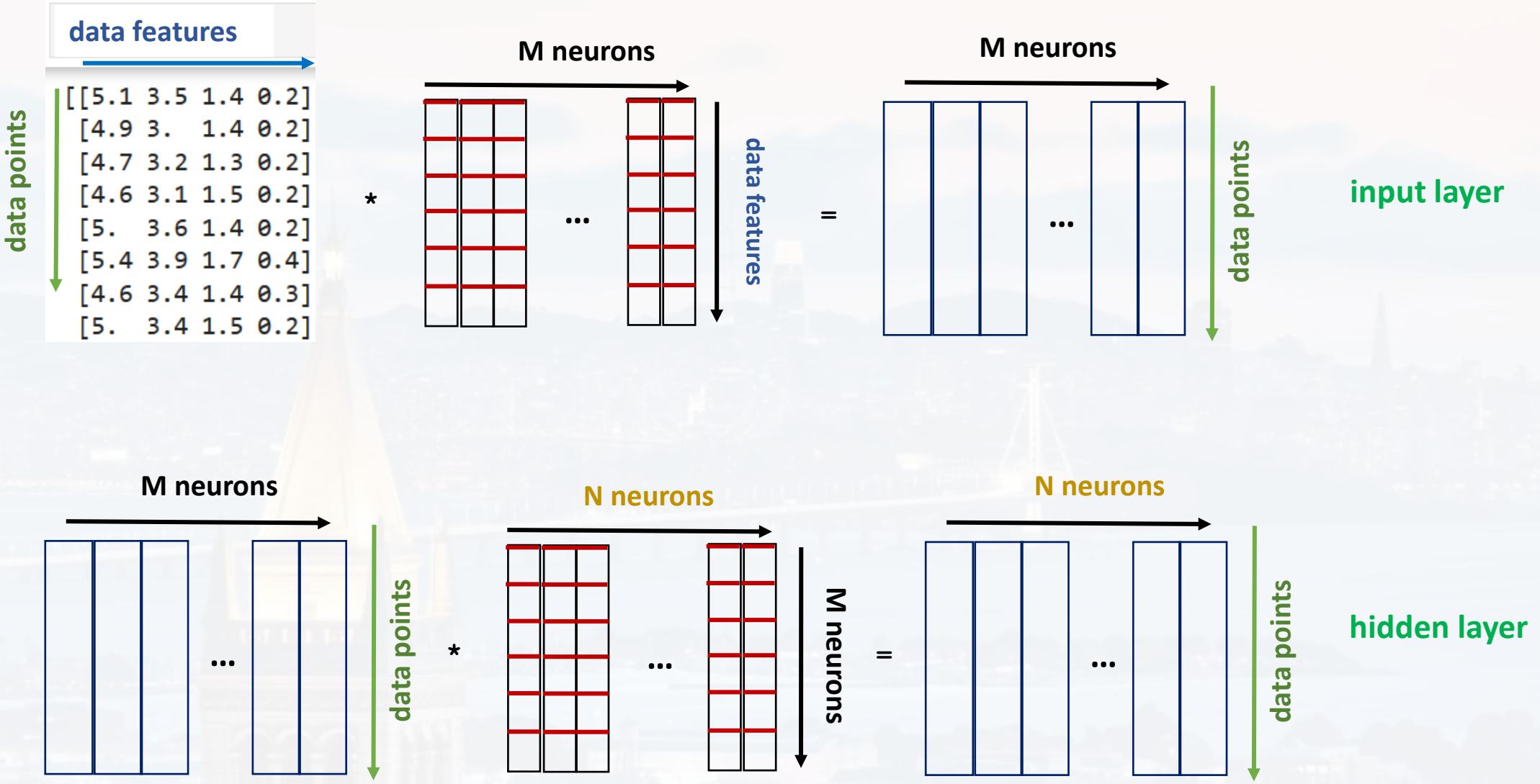

Regression vs Classification

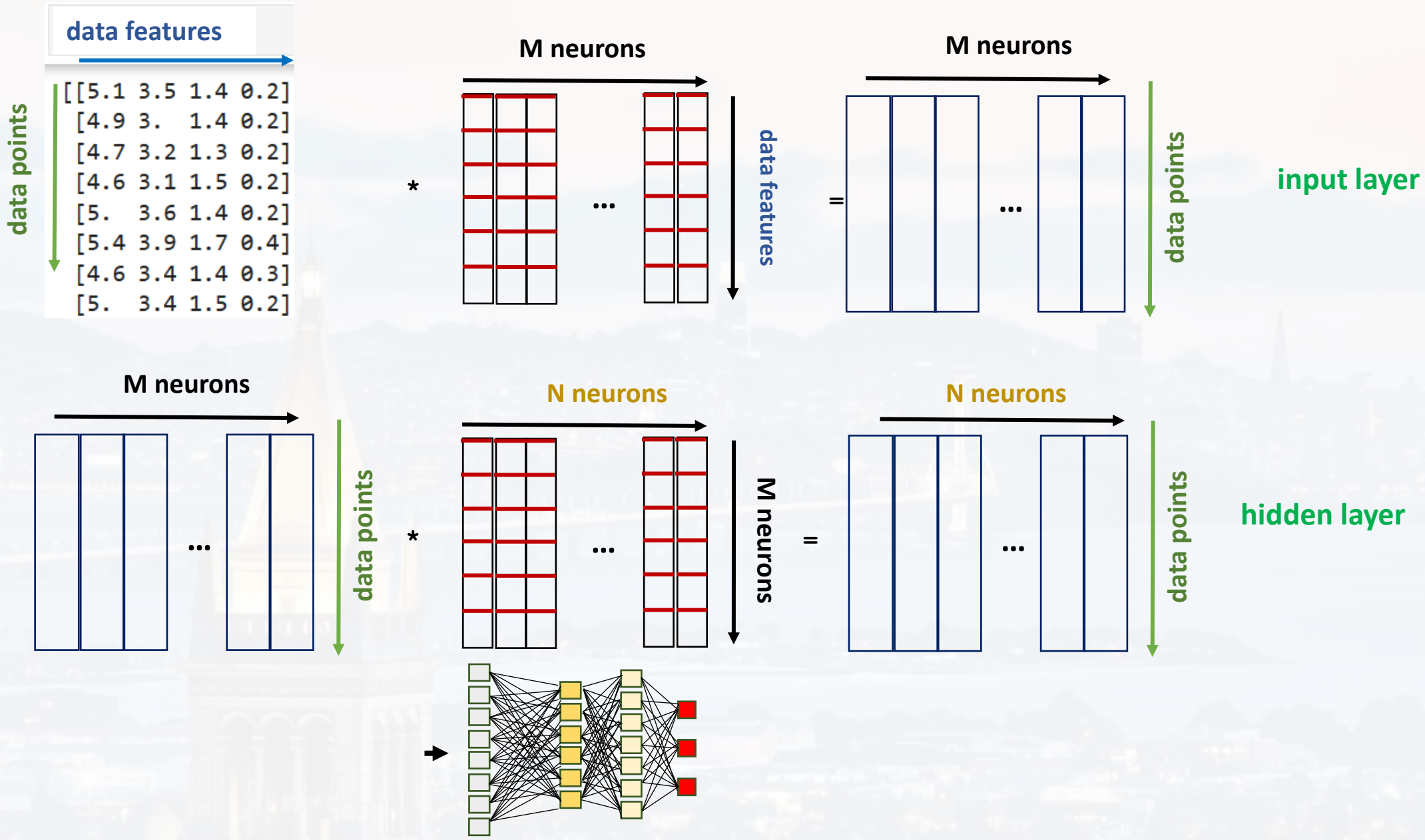

Regression vs Classification

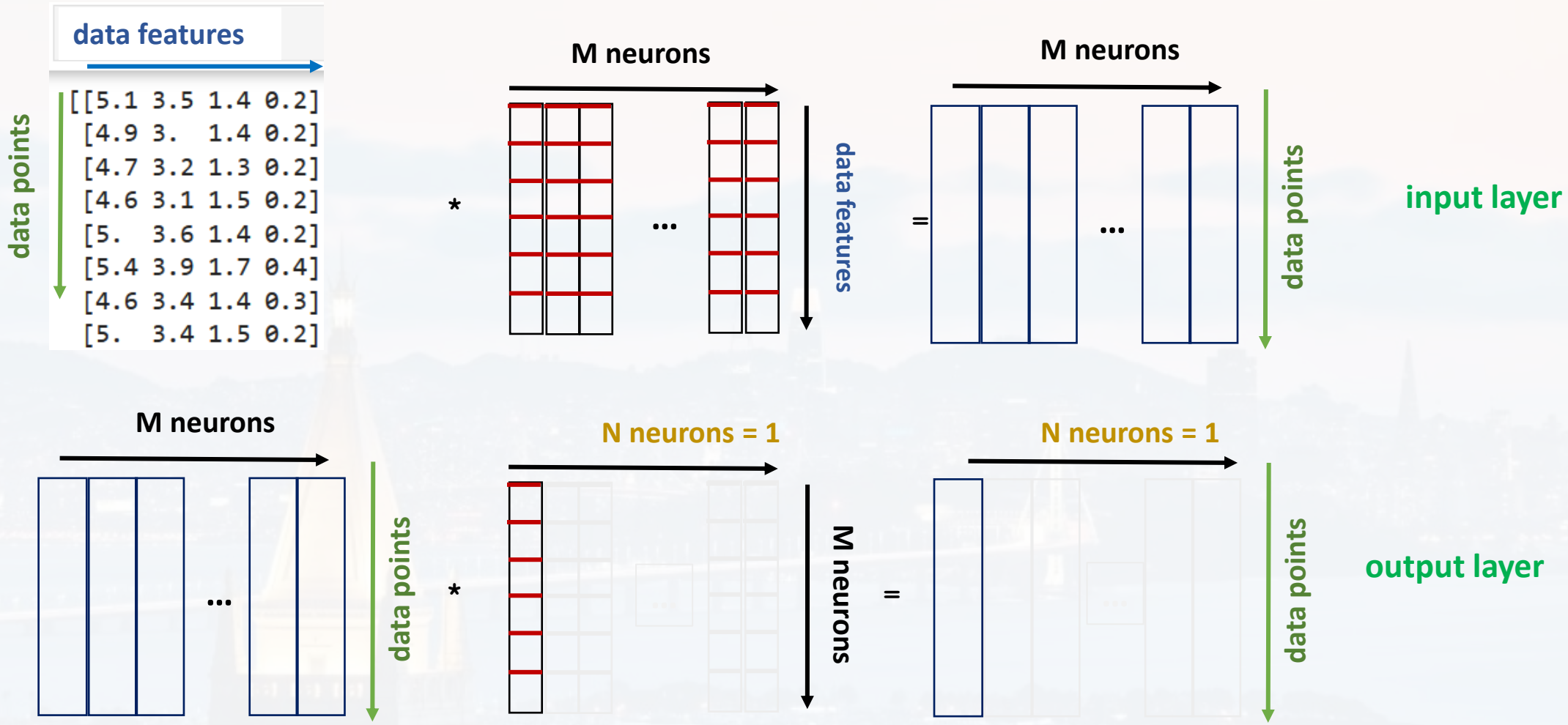

regression: we need only **one output per data point**

Regression vs Classification

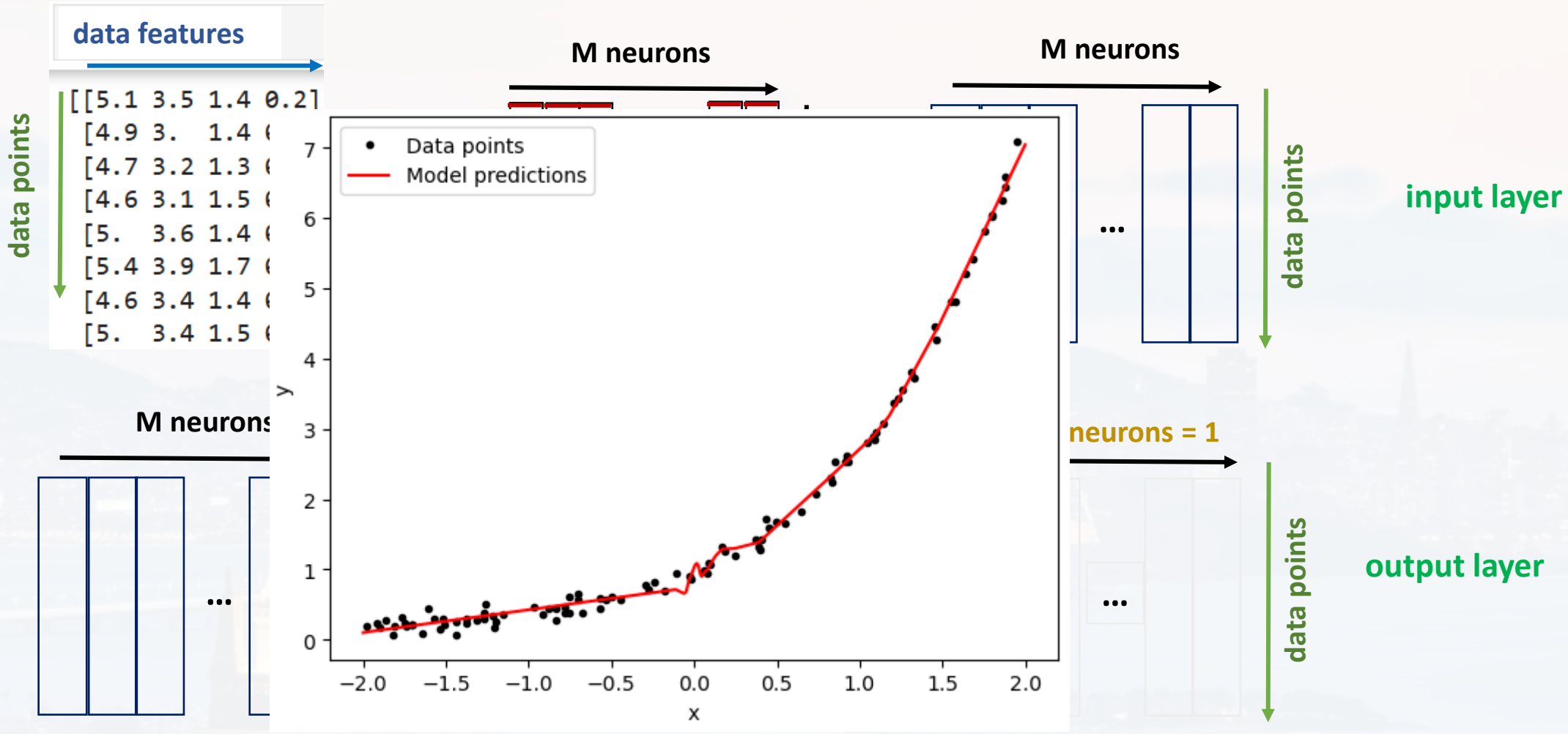

regression: we need only **one output per data point**

Regression vs Classification

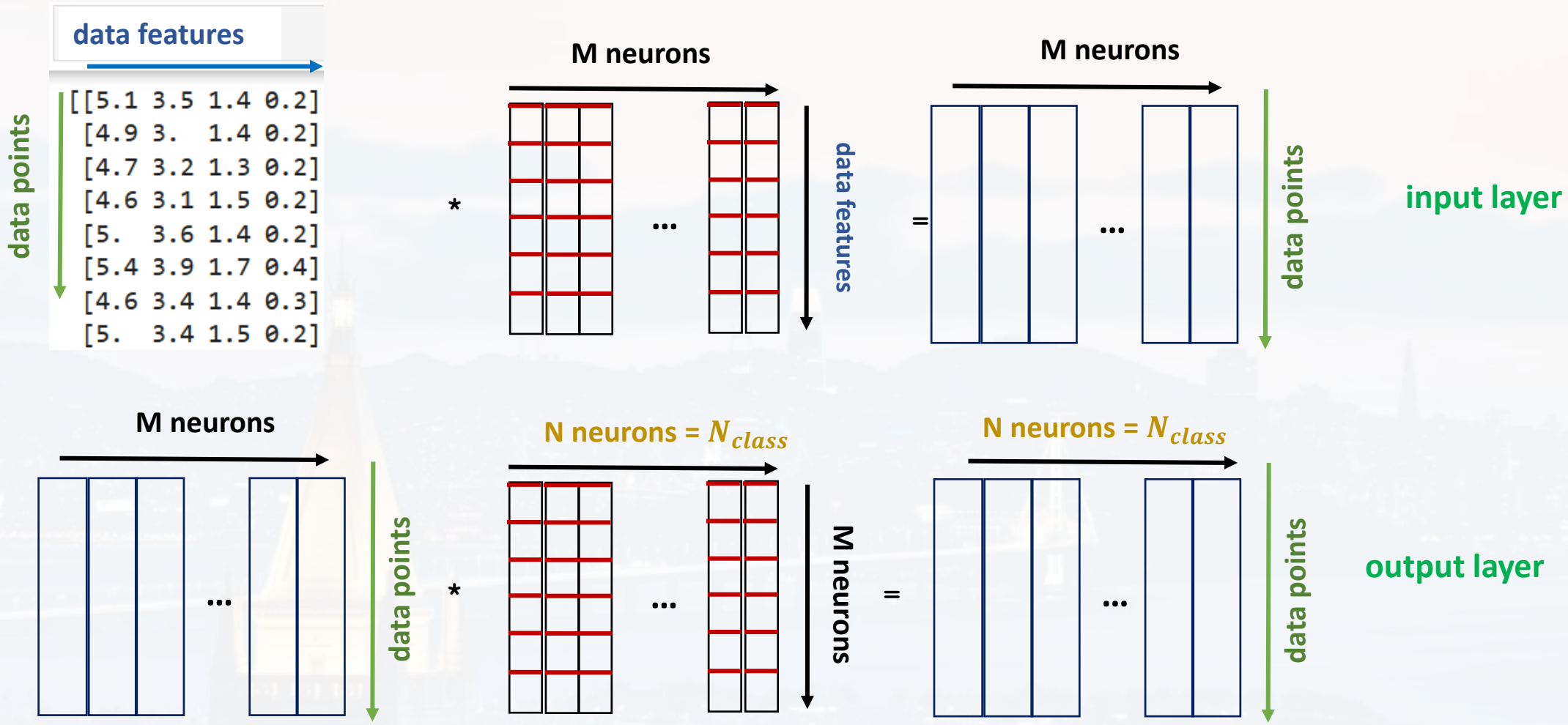

classification:
we need as many **outputs per data point as classes!**

Regression vs Classification

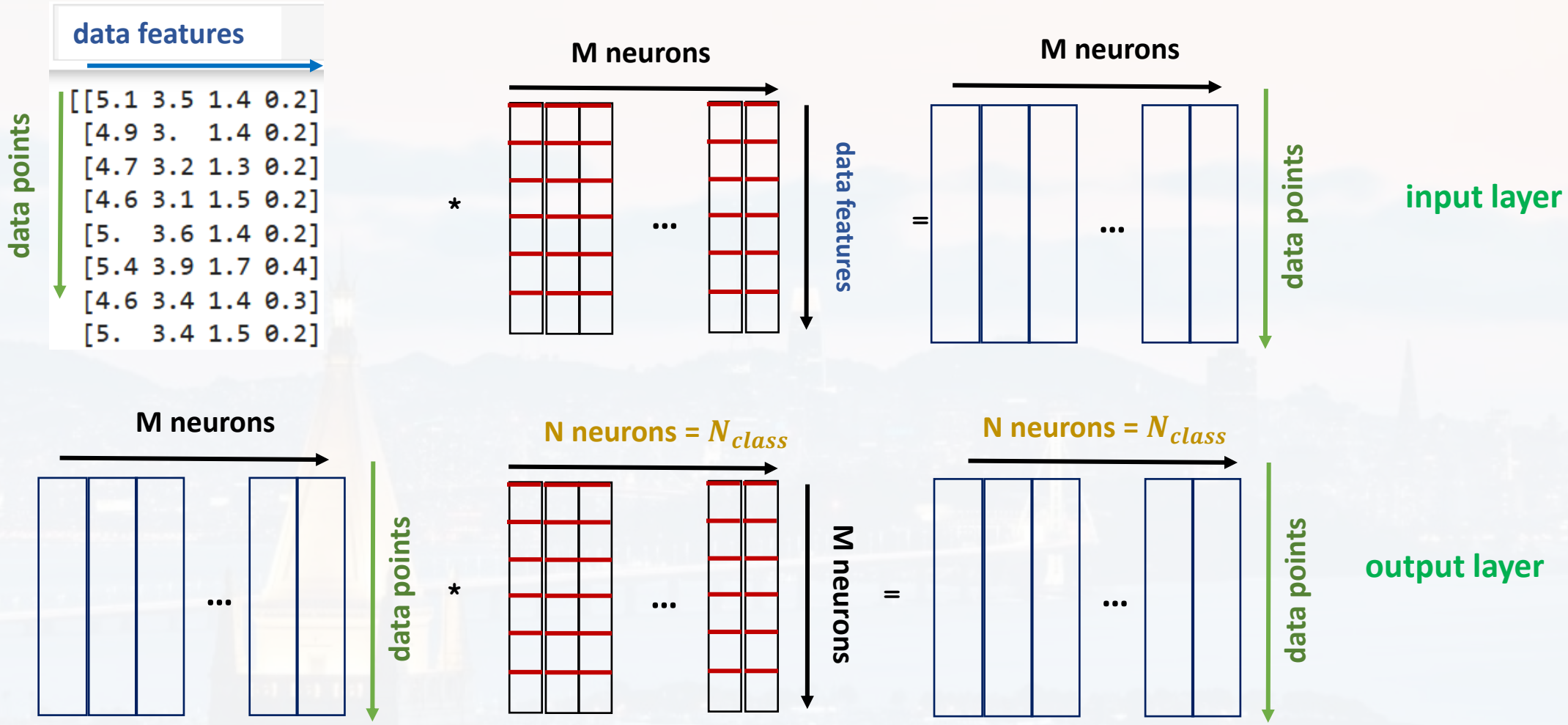

classification:

we need as many **outputs per data point as classes!**

category/class

$$\texttt{prob_pred} = \begin{pmatrix} 0.80 & 0.10 & 0.10 \\ 0.90 & 0.05 & 0.05 \\ 0.10 & 0.15 & 0.75 \\ 0.20 & 0.70 & 0.10 \\ \cdots & \cdots & \end{pmatrix}$$

data points

Regression vs Classification

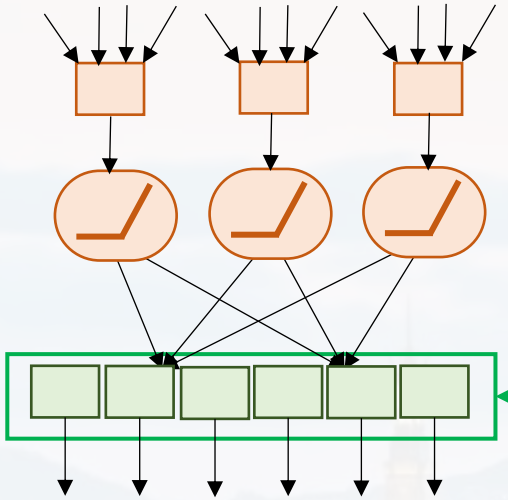

for classification: `Nclasses` values for each datapoint (**probabilities** for each class)

ε_i: output from the last hidden layer

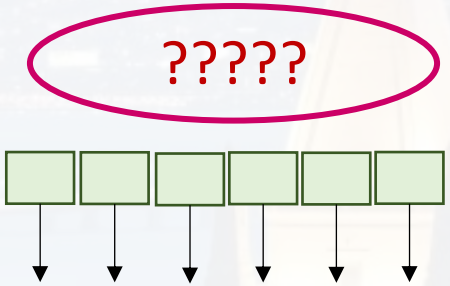

$$p_i = \frac{\exp(\varepsilon_i)}{\sum_i \exp(\varepsilon_i)}$$

Boltzmann distribution aka softmax
(from max entropy)

category/class

$$\texttt{prob_pred} = \begin{pmatrix} 0.80 & 0.10 & 0.10 \\ 0.90 & 0.05 & 0.05 \\ 0.10 & 0.15 & 0.75 \\ 0.20 & 0.70 & 0.10 \\ \cdots & \cdots & \end{pmatrix}$$

data points

if only two classes:

$$p_1 = \frac{\exp(\varepsilon_1)}{\exp(\varepsilon_1) + \exp(\varepsilon_2)} = \frac{1}{1 + \exp(\varepsilon_2 - \varepsilon_1)}$$

only one number

$$\varepsilon_2 - \varepsilon_1 = \varepsilon$$

Regression vs Classification

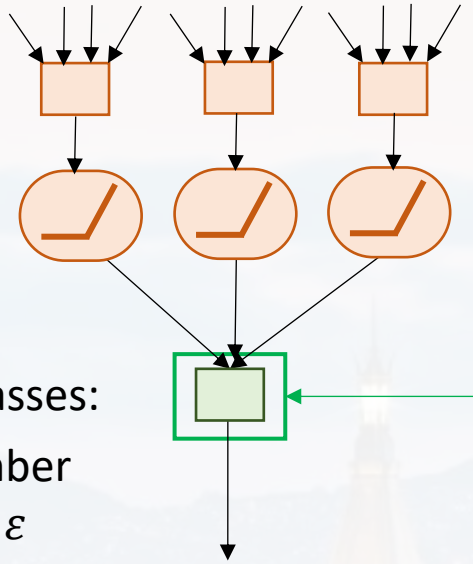

for classification: `Nclasses` values for each datapoint (**probabilities** for each class)

$$p_i = \frac{\exp(\varepsilon_i)}{\sum_i \exp(\varepsilon_i)}$$

Boltzmann distribution
aka softmax
(from max entropy)

if only two classes:

only one number

$\varepsilon_2 - \varepsilon_1 = \varepsilon$

$$p_1 = \frac{1}{1 + \exp(\varepsilon)}$$

$$\texttt{prob_pred} = \begin{pmatrix} 0.75 \\ 0.10 \\ 0.25 \\ \dots \end{pmatrix} \Big\downarrow \textbf{data points}$$

$$p_2 = 1 - p_1$$

Regression vs Classification

The loss function $d\mathcal{L}$ is then the difference between predicted and actual class probabilities

$$predicetd = \begin{pmatrix} \mathbf{0.80} & 0.10 & 0.10 \\ \mathbf{0.90} & 0.05 & 0.05 \\ 0.10 & 0.15 & \mathbf{0.75} \\ 0.20 & \mathbf{0.70} & 0.10 \end{pmatrix}$$

$$actual = \begin{pmatrix} \mathbf{1} & 0 & 0 \\ \mathbf{1} & 0 & 0 \\ 0 & 0 & \mathbf{1} \\ 0 & \mathbf{1} & 0 \end{pmatrix}$$

$$d\mathcal{L} = \begin{pmatrix} \mathbf{0.8-1} & 0.10 & 0.10 \\ \mathbf{0.9-1} & 0.05 & 0.05 \\ 0.10 & 0.15 & \mathbf{0.75-1} \\ 0.20 & \mathbf{0.70-1} & 0.10 \end{pmatrix}$$

Regression vs Classification

i:	index over class
j:	index over datapoints

ε_1 ε_2 ε_3 ε_4 ε_5 ε_6

last (= output) layer

$$p_{ij} = \frac{\exp(\varepsilon_{ij})}{\sum_i \exp(\varepsilon_{ij})}$$

softmax layer

p_1 p_2 p_3 p_4 p_5 p_6

$$p_i = 0.1 \quad 0.05 \quad 0.2 \quad 0.0 \quad 0.45 \quad 0.2$$

$$p_true_i = 0 \quad 0 \quad 0 \quad 0 \quad 1 \quad 0$$

outermost derivative $d\mathcal{L}$

thus, we need to calculate:

$$\partial\mathcal{L} = \boxed{\frac{\partial p}{\partial \varepsilon}} \ldots \partial w$$

$$\partial\mathcal{L} = \boxed{\frac{\partial p}{\partial \varepsilon}} \ldots \partial I$$

$$\partial\mathcal{L} = \boxed{\frac{\partial p}{\partial \varepsilon}} \ldots \partial b$$

say for three classes and four data points:

$$d\mathcal{L} = \begin{pmatrix} \mathbf{0.8-1} & 0.10 & 0.10 \\ \mathbf{0.9-1} & 0.05 & 0.05 \\ 0.10 & 0.15 & \mathbf{0.75-1} \\ 0.20 & \mathbf{0.70-1} & 0.10 \end{pmatrix}$$

Regression vs Classification

i: index over class
j: index over datapoints

$$\partial\mathcal{L} = \boxed{\frac{\partial p}{\partial \varepsilon}} \ldots \partial w$$

$$\partial\mathcal{L} = \boxed{\frac{\partial p}{\partial \varepsilon}} \ldots \partial I$$

$$\partial\mathcal{L} = \boxed{\frac{\partial p}{\partial \varepsilon}} \ldots \partial b$$

$$\frac{\partial}{\partial \varepsilon_{kj}} p_{ij} = \frac{\partial}{\partial \varepsilon_{kj}} \frac{\exp(\varepsilon_{ij})}{\sum_i \exp(\varepsilon_{ij})}$$

equals zero for $\mathbf{i} \neq \boldsymbol{k}$

$$= \boxed{\frac{\exp(\varepsilon_{kj})}{\sum_i \exp(\varepsilon_{ij})}} + \frac{\exp(\varepsilon_{ij})}{\left(\sum_i \exp(\varepsilon_{ij})\right)^2} \cdot (-1) \cdot \exp(\varepsilon_{kj})$$

$$= \frac{\exp(\varepsilon_{kj})}{\sum_i \exp(\varepsilon_{ij})} \left(1 - \frac{\exp(\varepsilon_{ij})}{\sum_i \exp(\varepsilon_{ij})}\right)$$

$$\left.\begin{aligned} &= p_{kj}(1 - p_{ij}) && i = k \\ &= -\boldsymbol{p_{kj} p_{ij}} && \boldsymbol{i \neq k} \end{aligned}\right\} \quad \boxed{\frac{\partial}{\partial \varepsilon_{kj}} p_{ij} = p_{kj}\delta_{ik} - \boldsymbol{p_{kj}\, p_{ij}}}$$

$$\delta_{ik} = \begin{cases} 1 & i = k \\ 0 & i \neq k \end{cases}$$

Regression vs Classification

$$\frac{\partial}{\partial \varepsilon_{kj}} p_{ij} = \frac{\partial}{\partial \varepsilon_{kj}} \frac{\exp(\varepsilon_{ij})}{\sum_i \exp(\varepsilon_{ij})}$$

***i*:** index over class
***j*:** index over datapoints

$$\delta_{ik} = \begin{cases} 1 & i = k \\ 0 & i \neq k \end{cases}$$

$$\frac{\partial}{\partial \varepsilon_{kj}} p_{ij} = p_{kj}(1 - p_{ij}) \qquad i = k$$

$$\frac{\partial}{\partial \varepsilon_{kj}} p_{ij} = -\boldsymbol{p_{kj} p_{ij}} \qquad \boldsymbol{i \neq k}$$

$$\boxed{\frac{\partial}{\partial \varepsilon_{kj}} p_{ij} = p_{kj}\delta_{ik} - \boldsymbol{p_{kj}\, p_{ij}}}$$

say p_{ij} is `[0.3 0.6 0.1]` for one particular *j*

$$\left\{\frac{\partial}{\partial \varepsilon_{kj}} p_{ij}\right\}_j = \underbrace{\begin{pmatrix} 0.3 & 0 & 0 \\ 0 & 0.6 & 0 \\ 0 & 0 & 0.1 \end{pmatrix}}_{p_{kj}\delta_{ik}} - \underbrace{\begin{pmatrix} 0.09 & 0.18 & 0.03 \\ 0.18 & 0.36 & 0.06 \\ 0.03 & 0.06 & 0.01 \end{pmatrix}}_{\boldsymbol{p_{kj} p_{ij}}}$$

$$\left\{\frac{\partial}{\partial \varepsilon_{kj}} p_{ij}\right\}_j$$ **Jacobian matrix**

Questions?